Installation instructions

Akrapovič Exhaust System:
Slip-On & Racing
for the
YAMAHA FZ8 / Fazer8 2010

502759

www.akrapovic.com

Congratulations on purchasing an Akrapovič exhaust system. Please read the entire installation manual prior to undertaking any activities related to installation of your new Akrapovič exhaust system. In case you do not fully understand the manual or any of its parts, please contact your authorized dealer!

This product should be installed by someone with sufficient knowledge of exhaust systems and their installation, and appropriate hand or power tools. If you are not qualified for this work, please utilize a certified mechanic for installation. By installing Your Akrapovič exhaust system, you indicate that you have read the installation manual in its entirety and you agree with the terms stated herein.

It is your responsibility to follow all installation instruction guidelines supplied with the Akrapovič exhaust system and undertake all necessary safety precautions. Akrapovič d.d. assumes no responsibility for damages occurring from misuse, abuse, improper installation, improper operation, lack of responsible care, or all previously stated reasons resulting from incompatibility with other manufacturer's products and/or systems.

IMPORTANT INFORMATION

Exclusion of Certain Liability

1. The manufacturer, importer or dealer shall not be liable for any incidental damage including personal injury or any other damages caused by improper installation or operation of the Akrapovič exhaust system. When installing the Akrapovič exhaust system be careful that the exhaust system does not touch other parts sensitive to high temperature.
2. Akrapovič makes no representation or warranties with regard to damage caused by the improper installation, use and maintenance of the Akrapovič exhaust system. The warranty is limited to defects recognized by our technical department and due to normal use, and excludes items subject to normal wear (gaskets and damping wool). The guarantee is void in case of accident, modification, improper or competition use.
3. Do not attempt to install the Akrapovič exhaust system on a vehicle model for which it was not made or tested by Akrapovič.
4. When the exhaust system gets very hot during operation, be careful not to burn yourself on the exhaust system or parts which are in direct contact with it, even when the engine is not running. Also protect other people, especially children, from the injuries mentioned above.
5. In some cases Akrapovič exhaust system kits contain chemical products (ceramic anti-seizing grease; bolt sealant). Handle with care, do not inhale or swallow. Avoid excessive contact with skin, eyes or mucous membranes. Keep out of reach of children.
6. Technical specifications of Akrapovič exhaust systems and related products are subject to change without notice.
7. Before removing the original exhaust system from your vehicle, please compare the parts you received with the list of materials provided in the installation manual in order to assure that you have all the parts necessary for the installation of your new Akrapovič exhaust system.
8. Although this manual consists of instructions for installation in written form, as well as photographs and pictures representing individual steps of the installation, please note that the photographs and pictures are symbolic and are intended for representation of general overview only. The photographs and pictures contained herein should serve as a guideline only and actual installation of the exhaust system may not correspond with the photographs and pictures entirely.
9. The process of uninstalling the original exhaust system may vary depending on the existing exhaust system. Please follow the original exhaust system manufacturer's instructions for uninstalling the original exhaust system.

Trademarks

The Akrapovič Exhaust System Technology logo is a registered trademark of Akrapovič d.d.

Akrapovič website

Information about Akrapovič exhaust systems and related products is available on the Akrapovič website at: **http://www.akrapovic.com/**

Copyright

No part of the Akrapovič exhaust system or its documentation may be reproduced or distributed in any form or by any means without the prior written authorization of the Akrapovič company.

© Akrapovič, d.d. All rights reserved.

Symbols

The following symbols are used throughout these installation instructions:

TOOLS REQUIRED

TIGHTENING TORQUE

INSTALLATION TIP

CAUTION OR WARNING

USE BOLT SEALANT; Apply 3 to 4 small drops of bolt sealant onto the cleaned and degreased threads before tightening the bolts. **WARNING! Avoid contact with skin, eyes and mucous membranes. Do not inhale fumes. Keep out of reach of children.**

USE ANTI-SEIZE LEAD-FREE COPPER PASTE (black tube); Provides trouble-free and long-lasting protection against seizing, corrosion and rusting of bolts, threaded ends, nuts, joints, etc. Also protects against vibration, wear and impact. **WARNING! Avoid eye contact. Avoid excessive skin contact. Keep out of reach of children.**

USE ANTI-SEIZING GREASE (white tube); Prevents seizing, corrosion and excessive wear between the titanium components of your exhaust system. **WARNING! Avoid eye contact. Avoid excessive skin contact. Keep out of reach of children.**

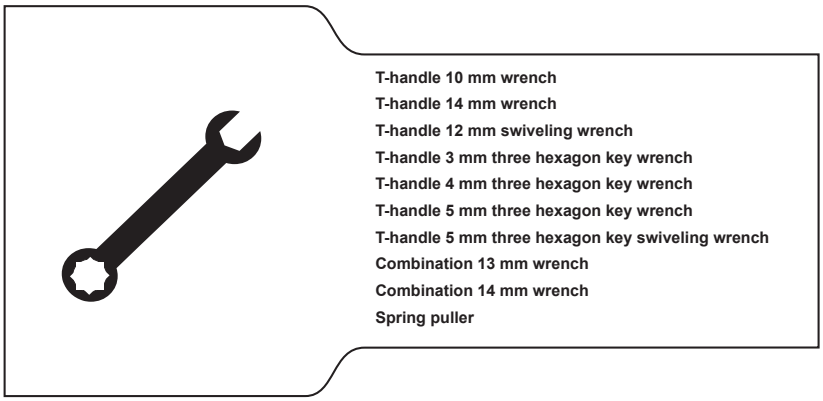

BEFORE INSTALLING, CHECK SCHEMATIC OF THE EXHAUST SYSTEM!

IF ANY ITEMS IN THE AKRAPOVIČ EXHAUST SYSTEM PACKAGE ARE MISSING, PLEASE CONTACT YOUR AUTHORIZED DEALER. KEEP THE SCHEMATIC FOR FUTURE REFERENCE.

THESE INSTALLATION INSTRUCTIONS MUST BE READ CAREFULLY IN ORDER TO ENSURE PROPER INSTALLATION AND OPERATION OF THE AKRAPOVIČ EXHAUST SYSTEM.

THE EXHAUST SYSTEM CAN BE EXTREMELY HOT. ALLOW THE EXHAUST AND ENGINE TO COOL DOWN BEFORE BEGINNING INSTALLATION.

WE ADVISE YOU TO LEAVE INSTALLATION TO A QUALIFIED SERVICEMAN. IMPROPER INSTALLATION MAY RESULT IN A SHORTER LIFETIME OF THE EXHAUST SYSTEM AND/OR DAMAGE TO THE VEHICLE.

REMOVAL OF STOCK EXHAUST SYSTEM:

1. Put the motorcycle on a side stand, we recommend a racing stand.
2. Untighten the marked bolt of the link pipe clamp, unscrew the marked muffler braket bolt and remove the stock mufler off the motorcycle **(Figure 1, 2).**

Figure 1

Figure 2

3. Untighten the marked bolts and remove the stock muffler braket off the motorcycle **(Figure 3, 4).**

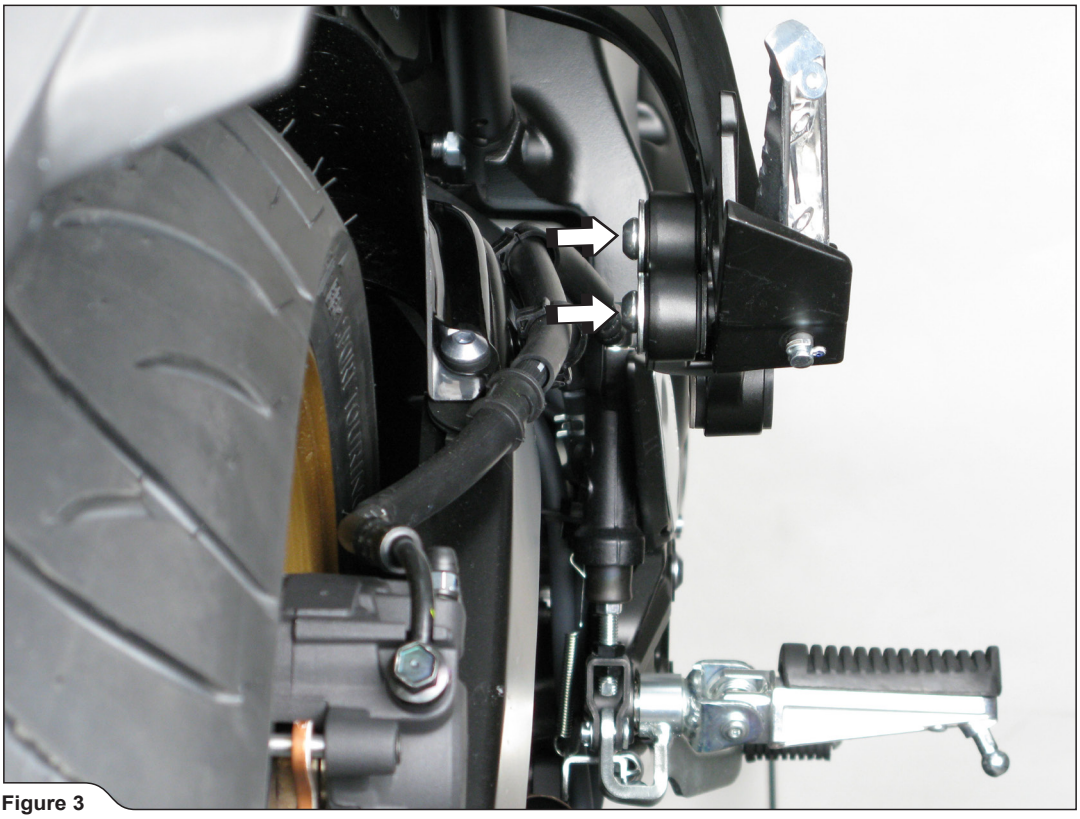

Figure 3

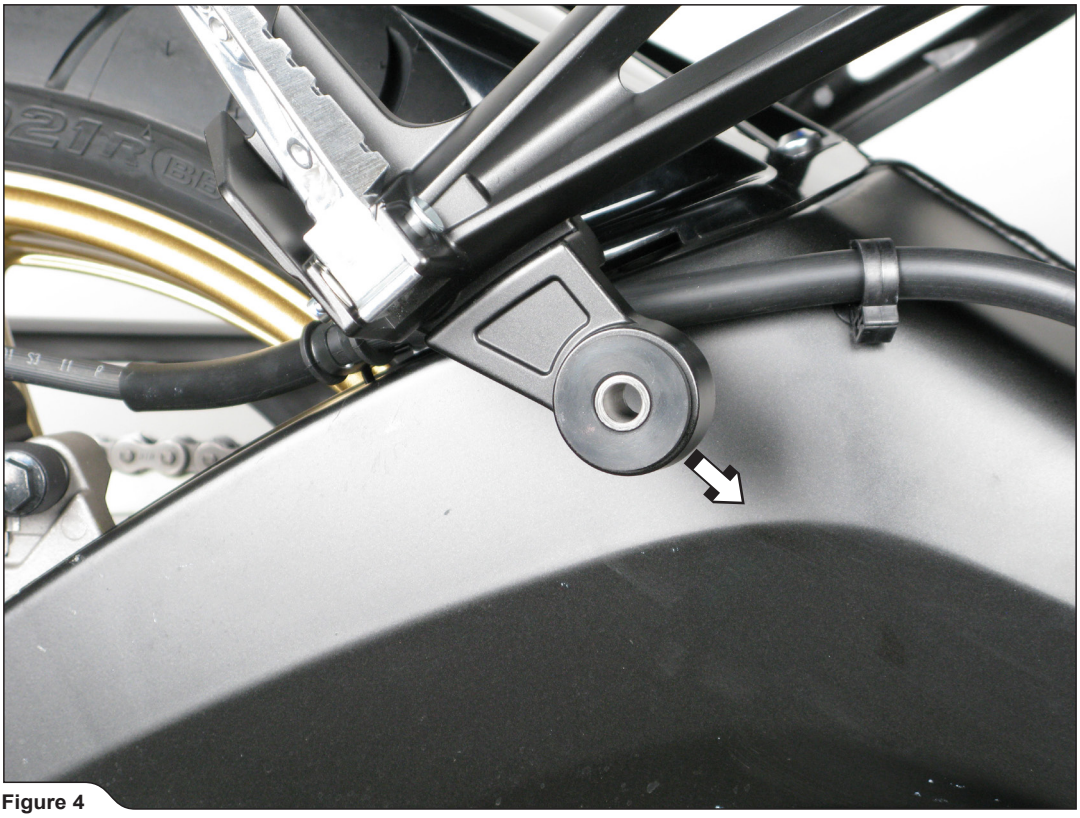

Figure 4

4. **For Akrapovič Racing only:** unscrew the lambda sensor **(Figure 5).**

! **CAUTION: make sure not to damage the sensor's electrical lesd during this process!**

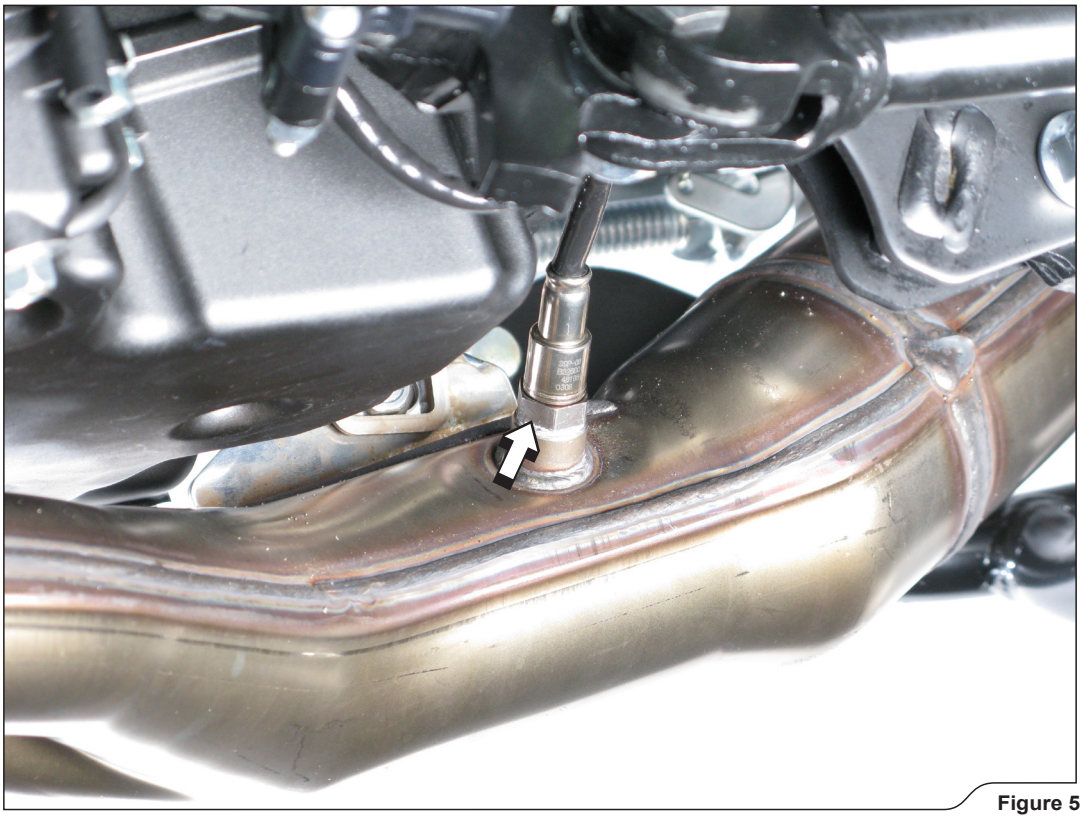

Figure 5

5. **For Akrapovič Racing only:** unscrew the marked stock header pipe braked bolt **(Figure 6).**

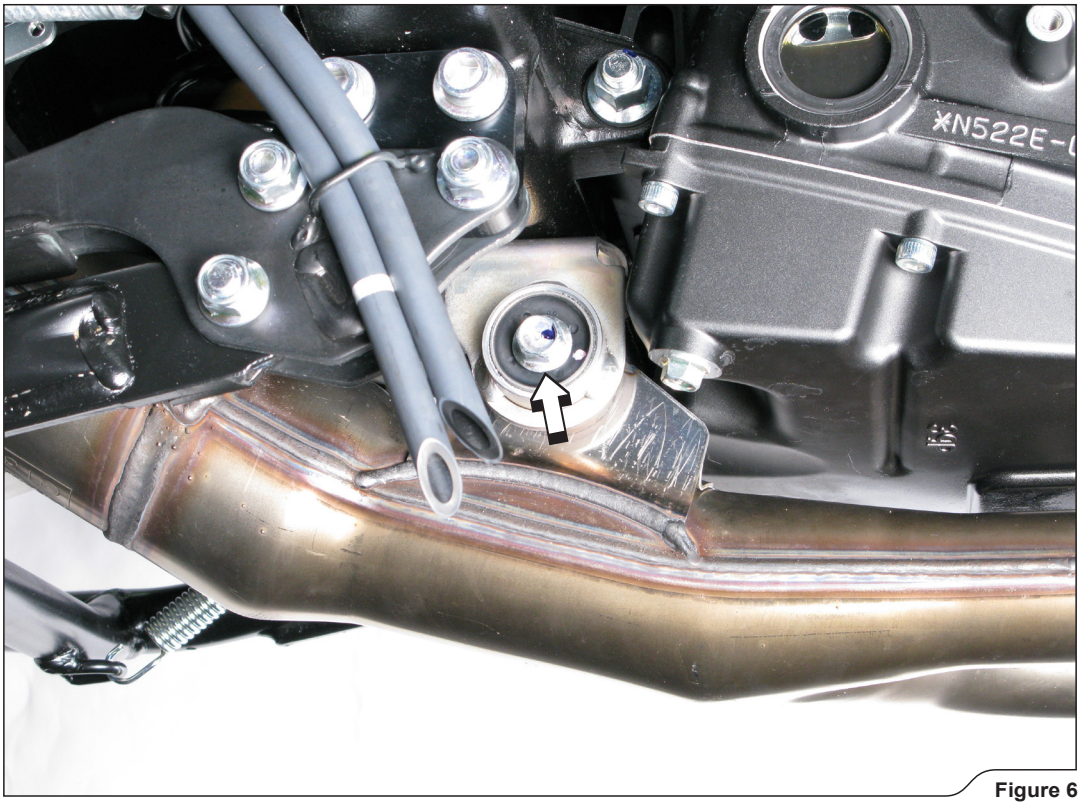

Figure 6

6. **For Akrapovič Racing only:** uncsrew the bolt from the lower water cooler hanging bracket and slightly remove the cooler. Make sure not to demage the cooling fins of the cooler **(Figure 7).**

! **WARNING: do not disconnect the cooling system tubes!**

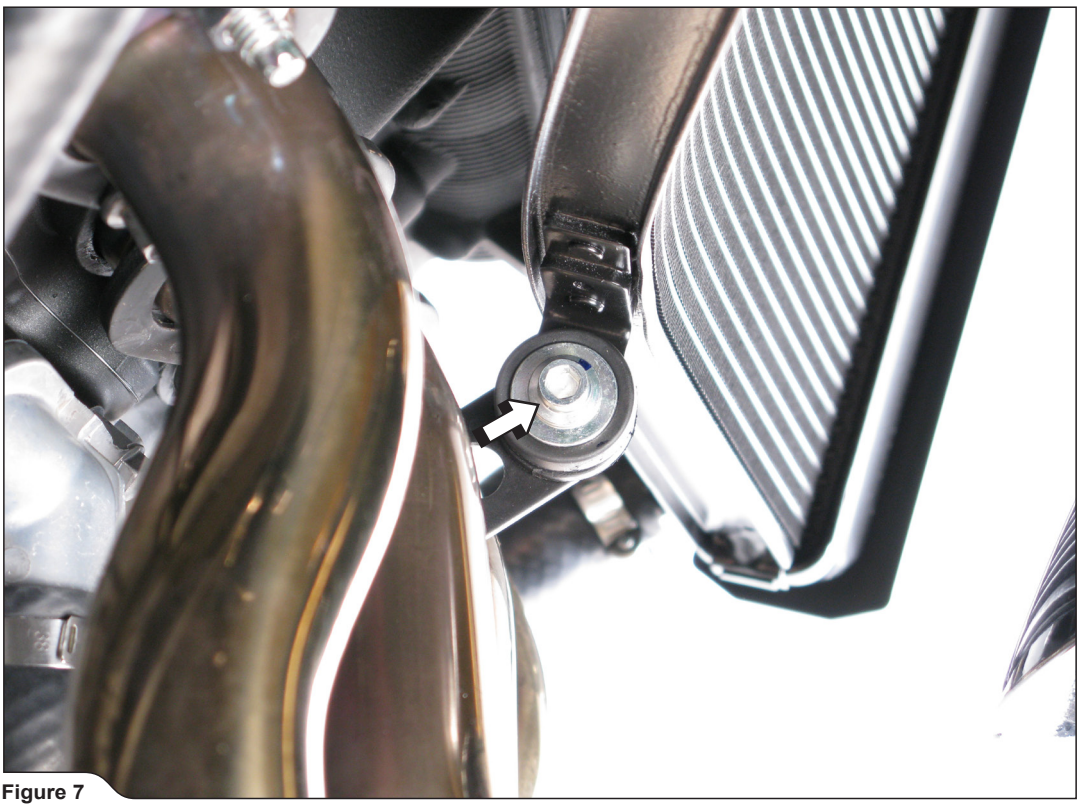

Figure 7

7. **For Akrapovič Racing only:** unscrew the flanges' nuts and remove the stock header pipes off the motorcycle **(Figure 8).**

Figure 8

INSTALLATION OF THE AKRAPOVIČ EXHAUST SYSTEM:

1. **For Akrapovič Racing only:** set up the sleeves together with the flanges and springs, as shown **(Figure 9).**

Figure 9

2. **For Akrapovič Racing only:** hand tighten the assembled sleeves, flanges and springs onto the motorcycle **(Figure 10).**

! **WARNING: do not fully tighten the nuts yet!**

INSTALLATION TIP: use new stock exhaust ports' gaskets.

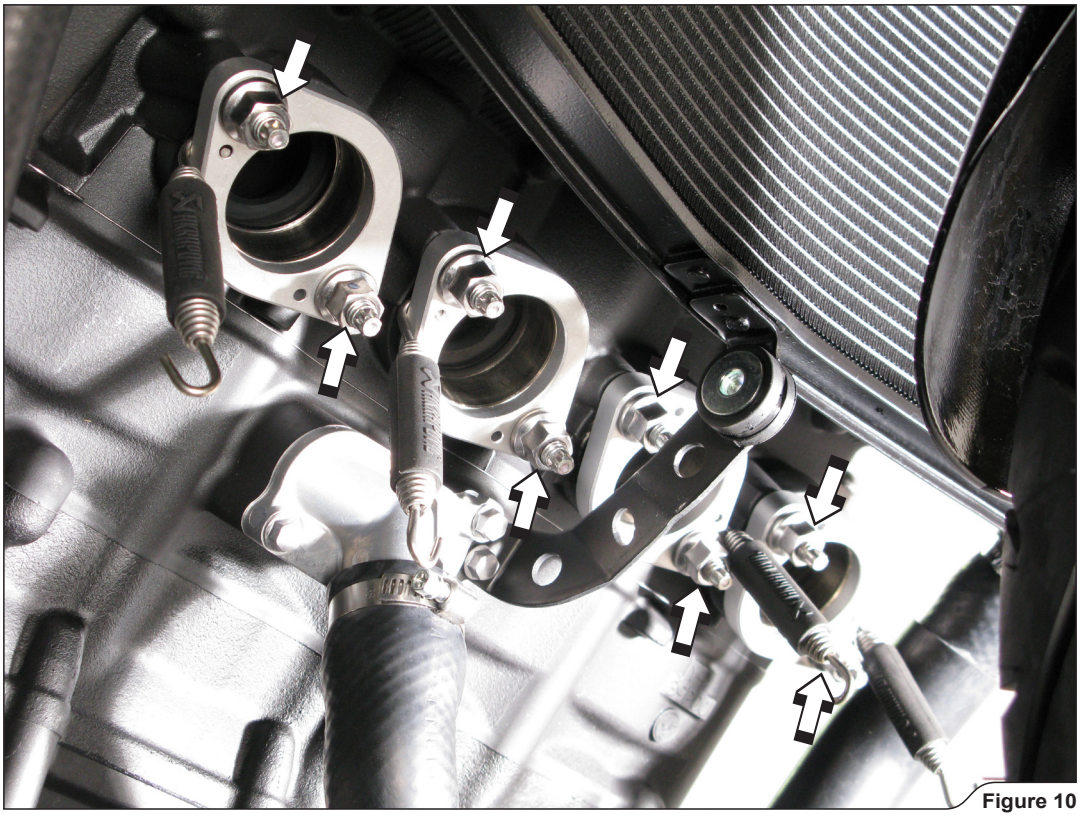

Figure 10

3. **For Akrapovič Racing only:** insert the header tubes into the sleeves, attach all four springs and tighten the nuts to a specified torques. Reattach the cooler to the bracket **(Figure 11).**

! **WARNING: before tightening the nuts, make sure, that springs pull the header tubes all the way into the sleeve – use rubber mallet if necessary to tap the connection into place!**

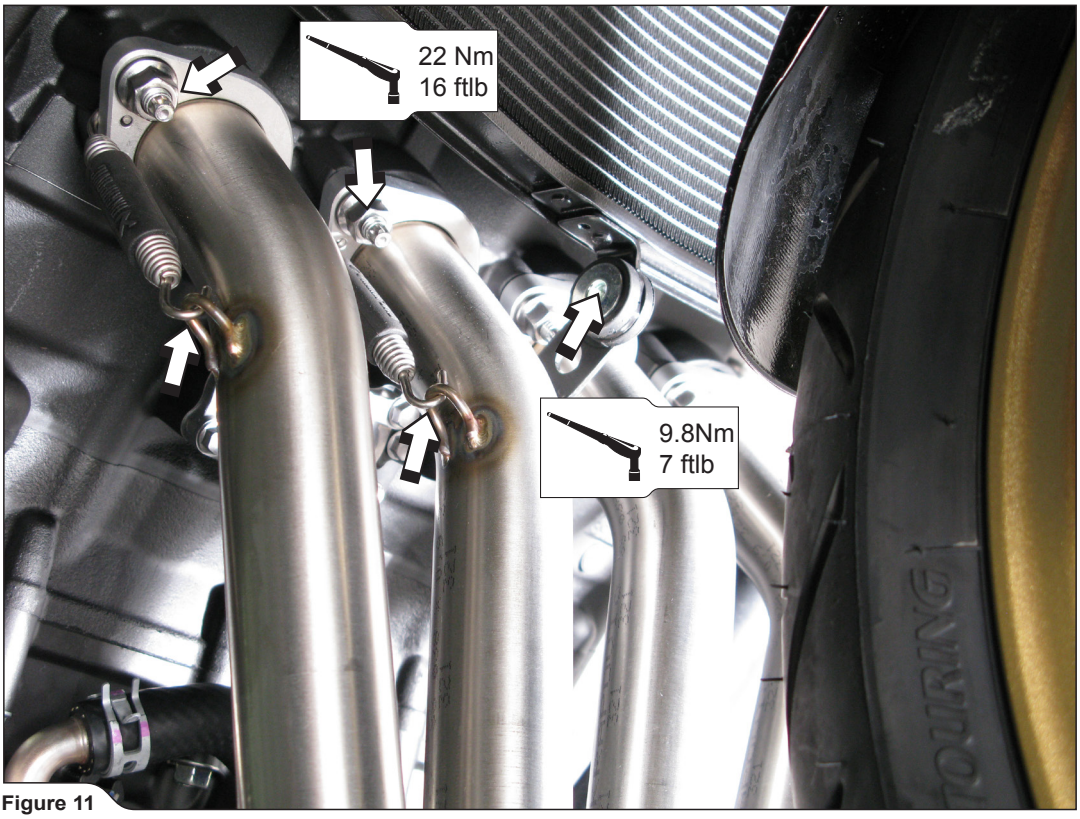

Figure 11

4. **For Akrapovič Racing only:** slide the collectors onto the header tubes (make sure they are correctly oriented) and attach the springs **(Figure 12).**

! **WARNING: make sure, that springs pull the collectors all the way onto the headers – use rubber mallet if necessary to tap the connections into place!**

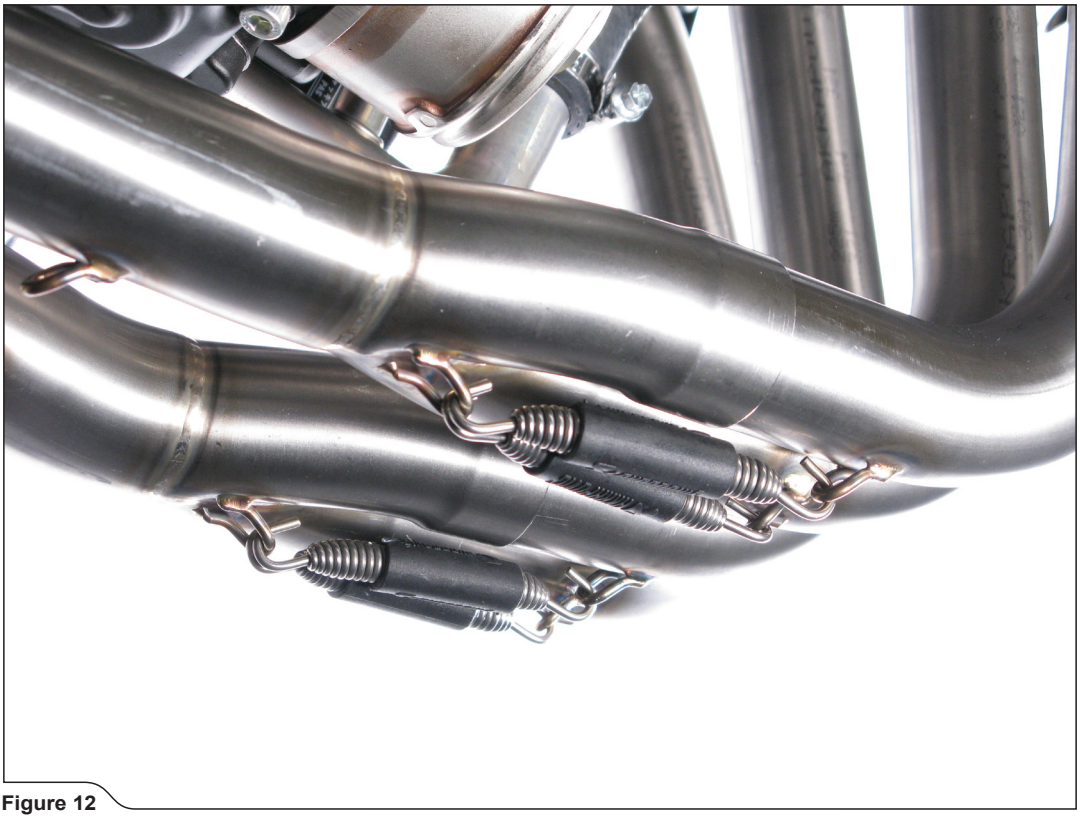

Figure 12

5. **For Akrapovič Racing only:** attach the Akrapovič press-on nut onto the link pipe bracket as shown **(Figure 13).**

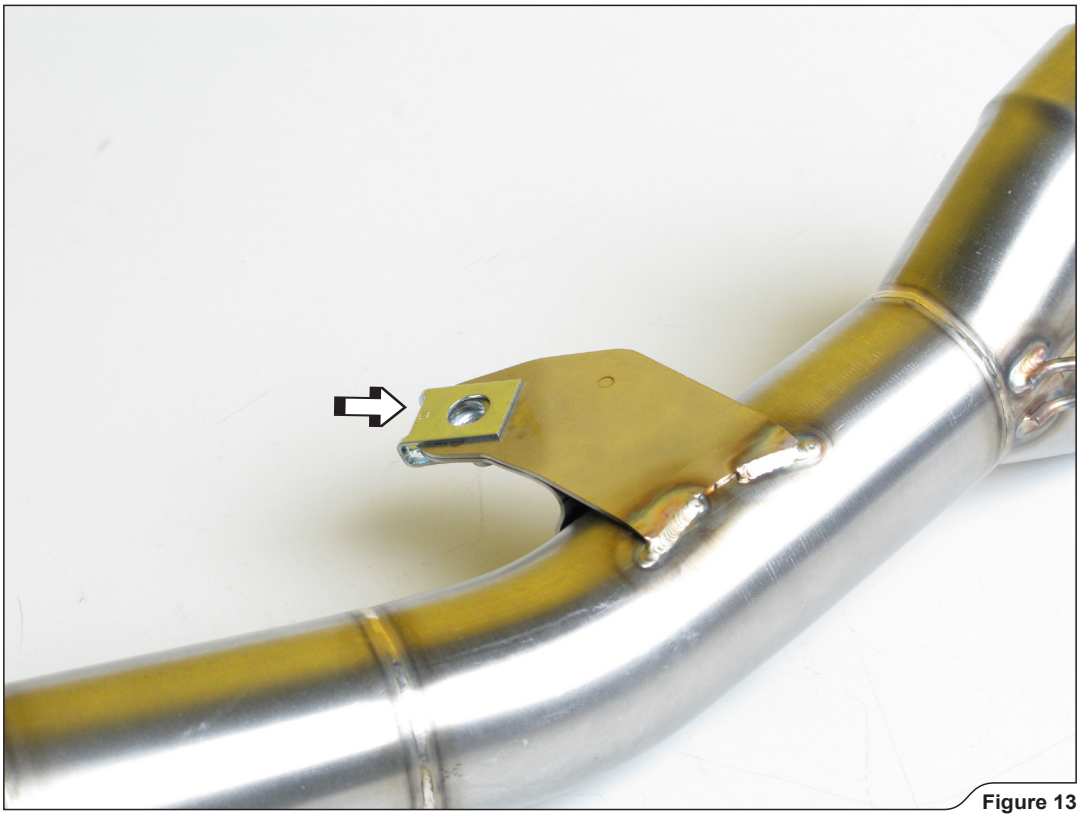

Figure 13

6. **For Akrapovič Racing only:** slide the link pipe onto the collectors and attach the springs **(Figure 14).**

! **WARNING: make sure, that springs pull the link pipe all the way onto the collectors – use rubber mallet if necessary to tap the connections into place!**

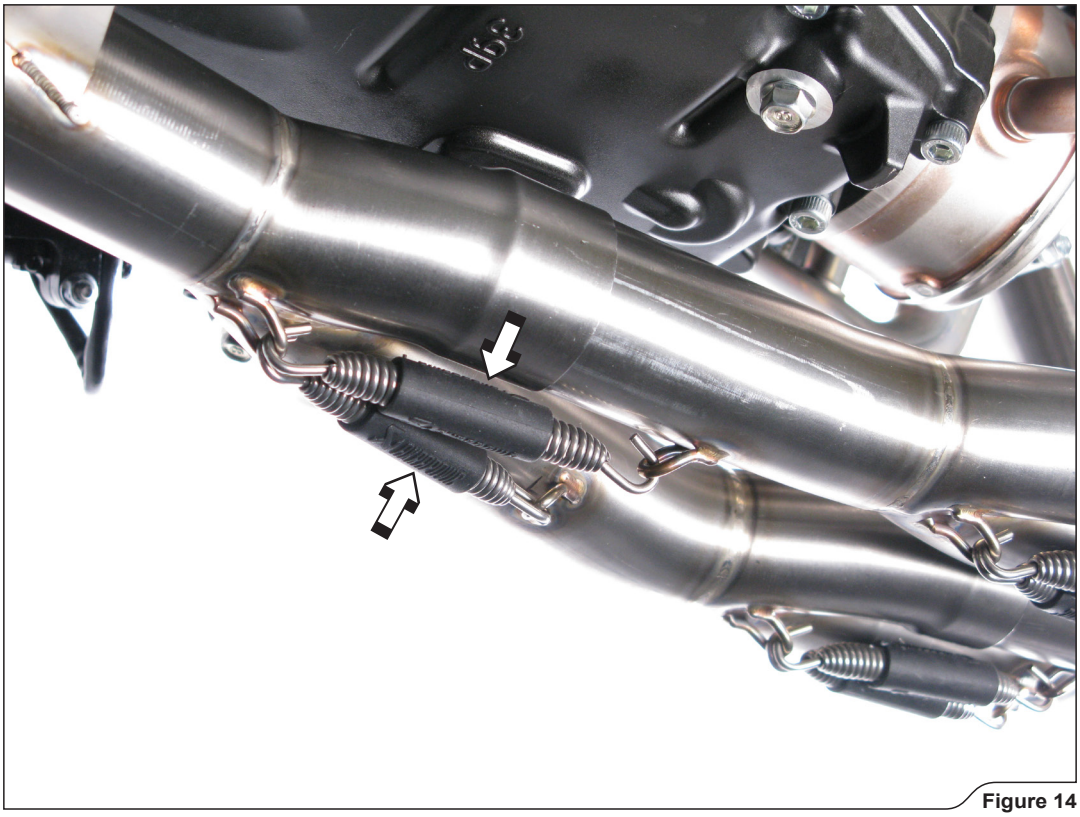

Figure 14

7. **For Akrapovič Racing only:** tighten the link pipe braket using stock bolt and washer **(Figure 15).**

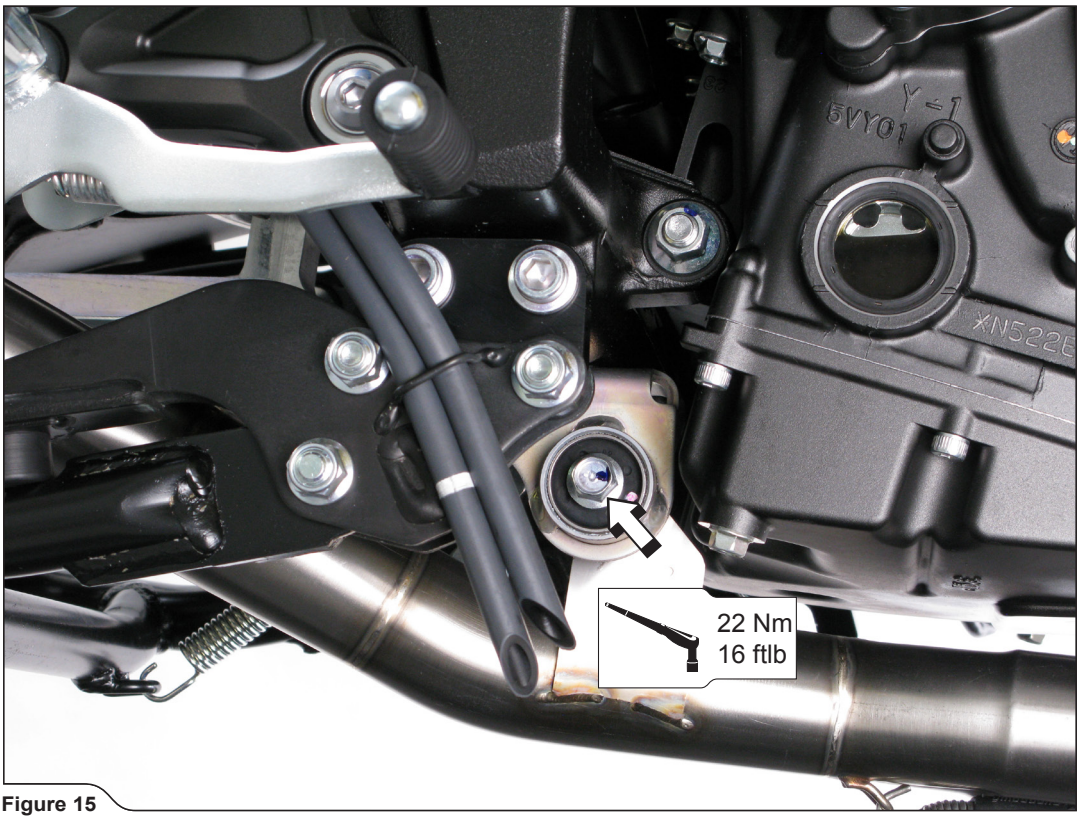

Figure 15

8. **For Akrapovič Racing only:** tighten the lambda sensor; make sure not to damage the sensor's electrical lead **(Figure 16).**

! **WARNING: grease only the threads of the lambda sensor!**

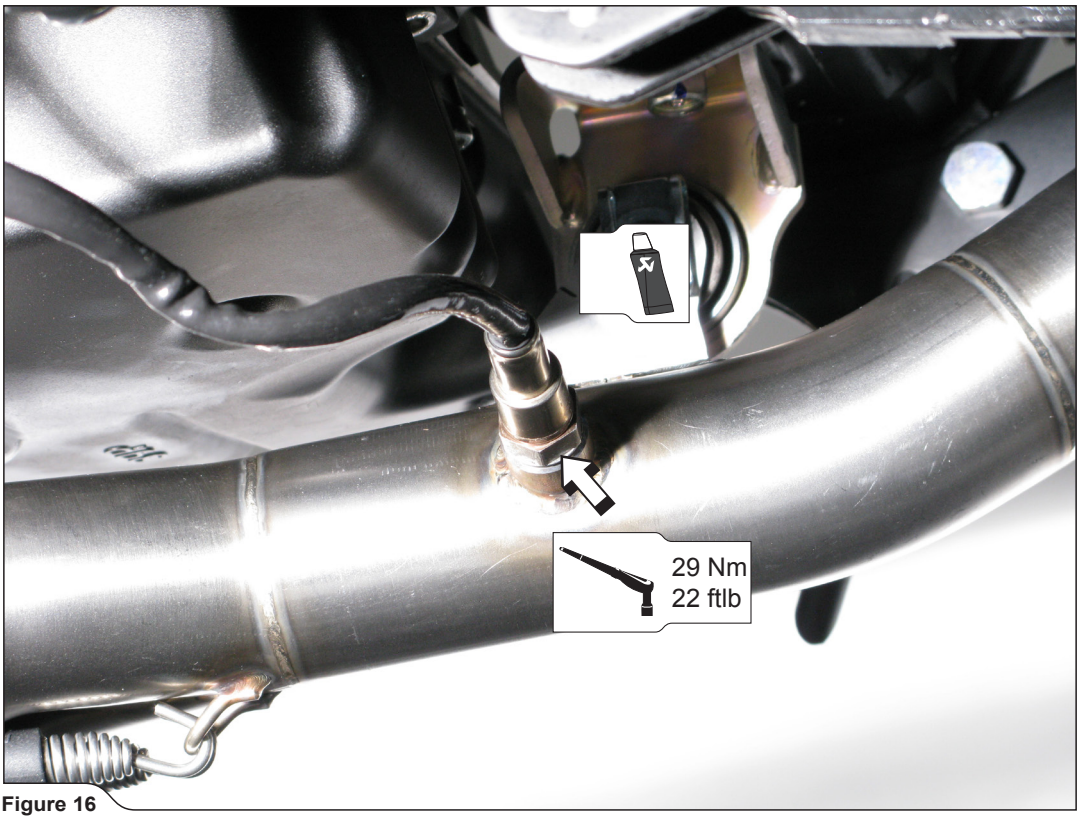

Figure 16

9. Correctly instal Akrapovič metal clamp onto the muffler inlet as shown **(Figure 17).**

! **WARNING: use anti-seize copper paste on bolt threads of the metal clamp!**

Figure 17

10. Correctly position the carbon-fiber clamp and slide it onto the muffler - bear in mind the **left offset** of the carbon fiber- clamp viewed from the rear; check the position of the yellow sticker on the clamp **(Figure 18).**

! **WARNING: open the clamp slightly wider than the diameter of the outer sleeve of the muffler – do not scrape it along the muffler outer sleeve!**

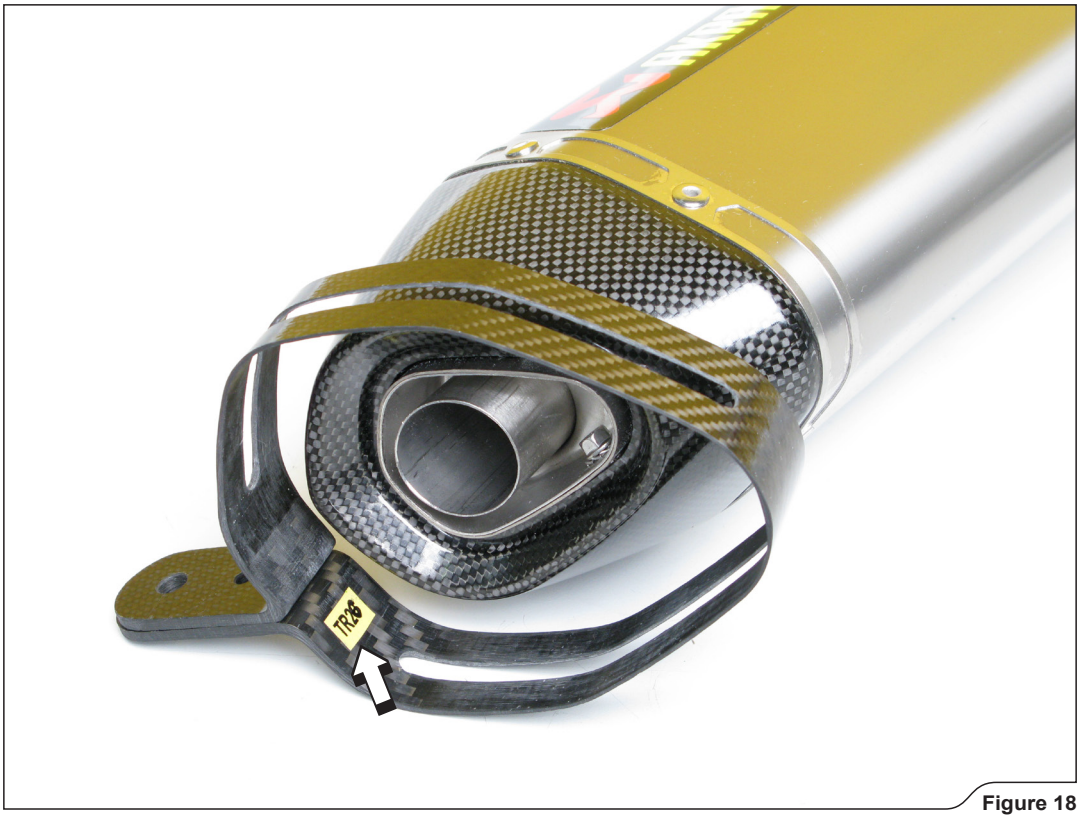

Figure 18

11. Correctly instal Akrapovič hook clamp onto the stock header pipe as shown and tighten it to a specified torque **(Figure 19).**

! **WARNING: use anti-seize copper paste on bolt threads of the hook clamp!**

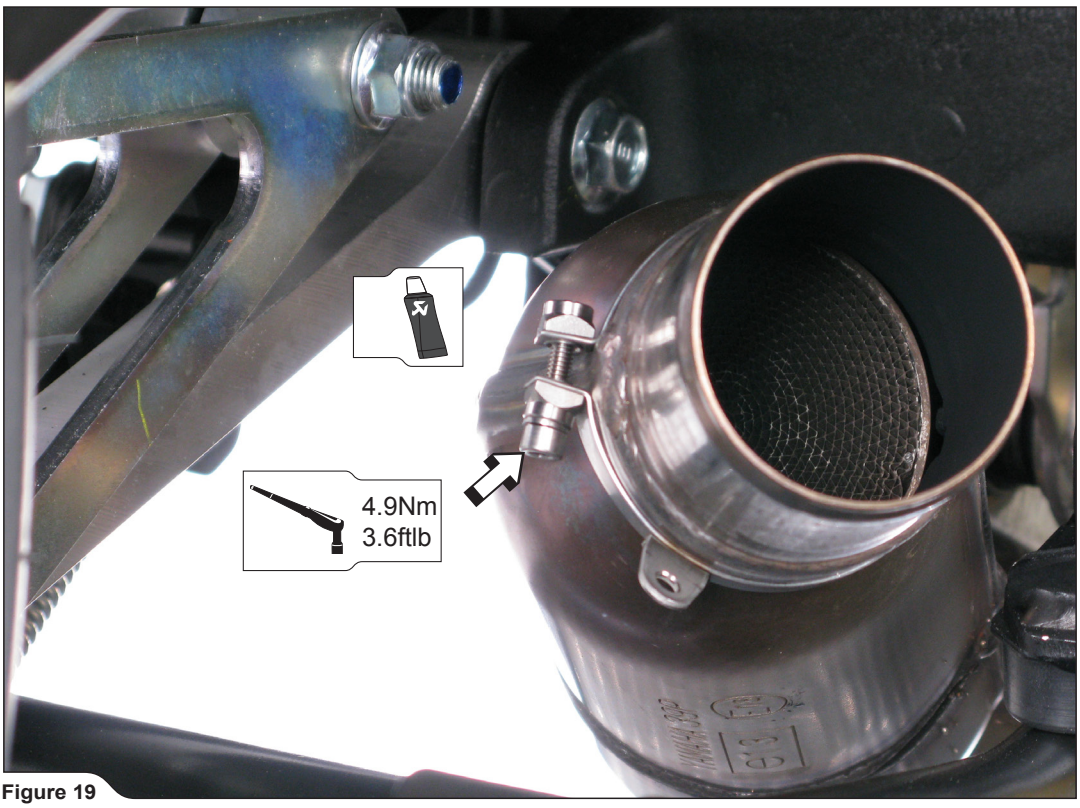

Figure 19

12. Position the muffler corretly and slide it onto the outlet side of stock header pipe. Attach the spring, align the muffler in respect to the motorcycle and tighten the metal clamp to a specified torque **(Figure 20).**

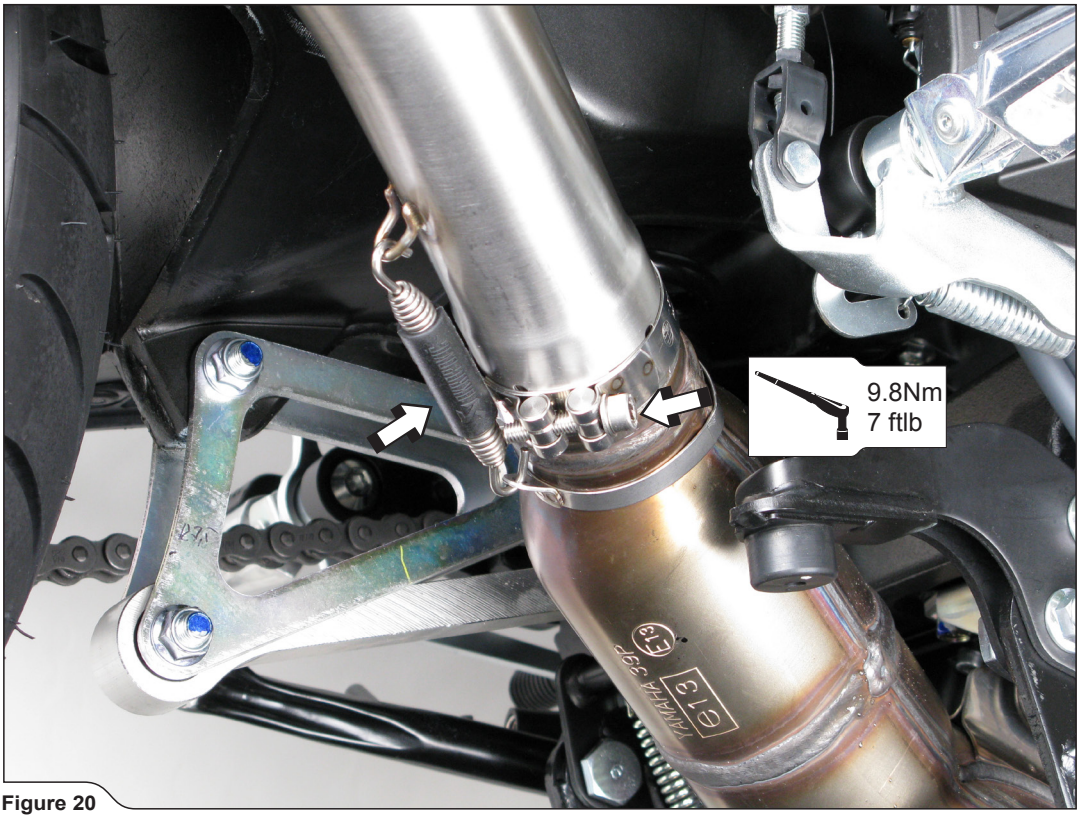

Figure 20

13. **For Akrapovič Racing only:** position the muffler corretly and slide it onto the outlet side of Akrapovič link pipe. Attach the spring, align the muffler in respect to the motorcycle and tighten the metal clamp to a specified torque **(Figure 21).**

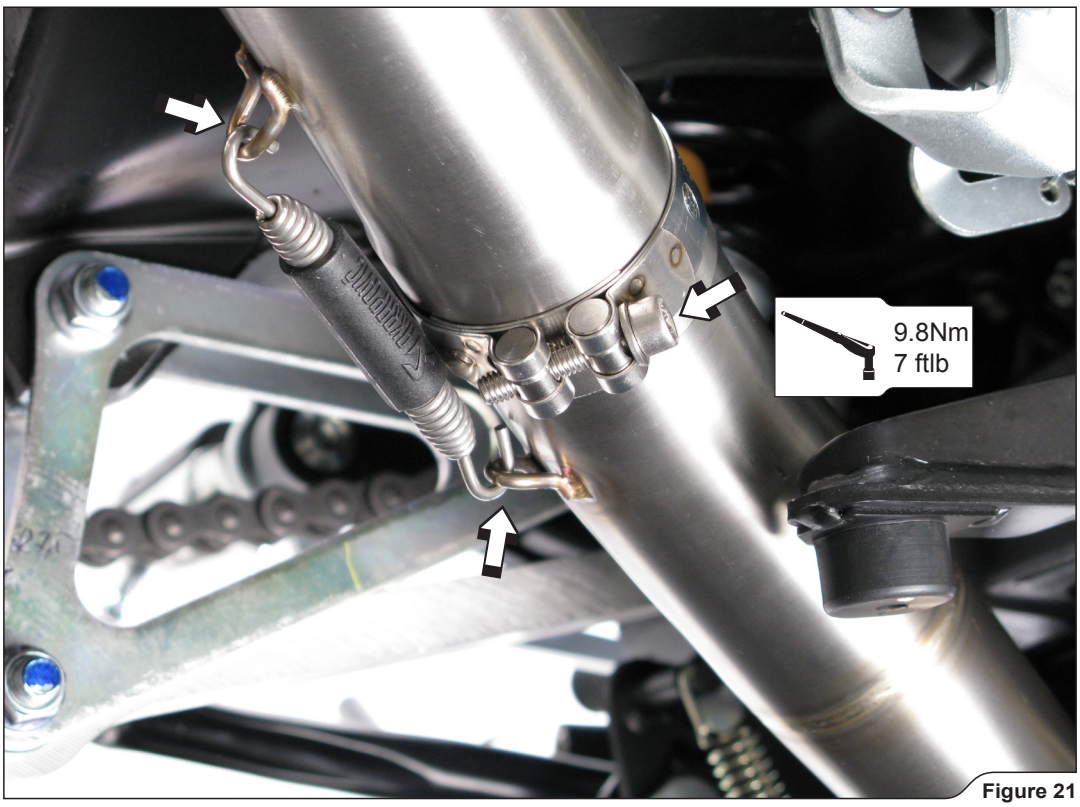

Figure 21

14. Tighten the carbon-fiber clamp's bolts to a specified torques, using Akrapovič bolts and washer. **(Figure 22).**

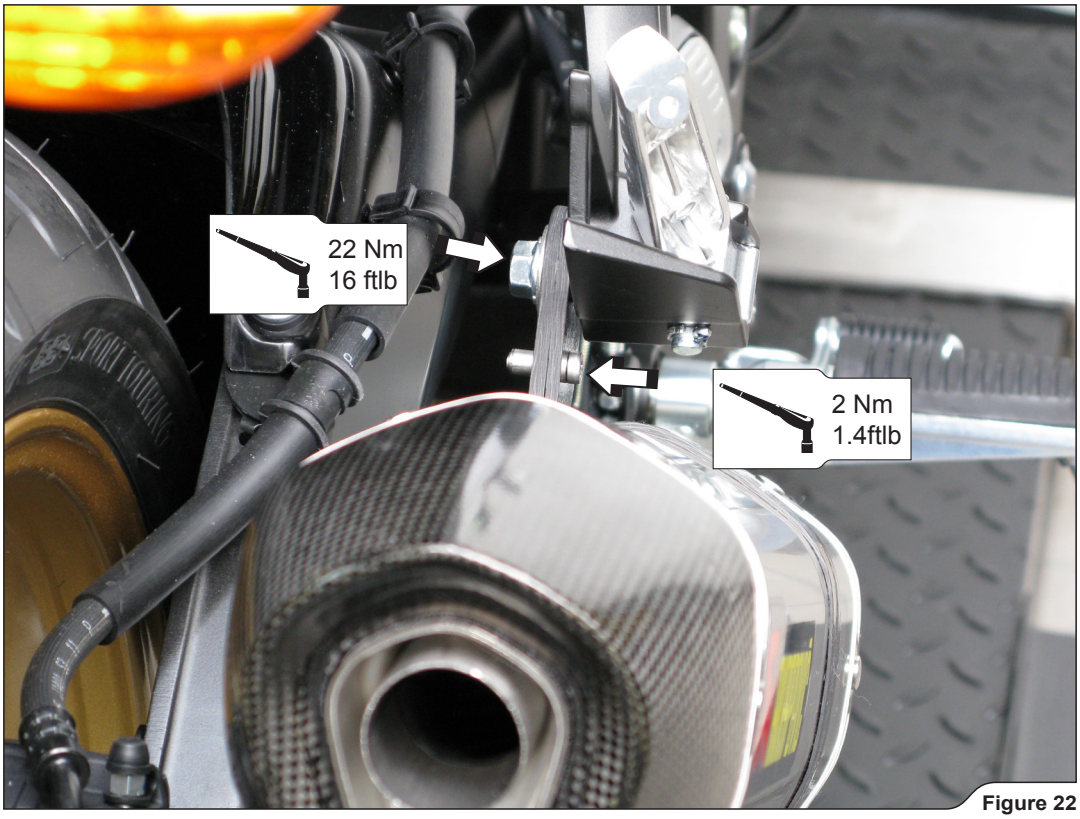

Figure 22

Final installation:

Clean grease spots:

a. Muffler – titanium outer sleeve: use a soft cloth sprayed with a multi-purpose spray lubricant (WD-40 or equivalent).
b. Muffler - carbon-fiber outer sleeve: use a soft dry cloth.
c. Muffler – carbon-fiber outlet cap: use a soft dry cloth.
d. Racing- stainless steel headers, collectors and link pipe: use a soft cloth sprayed with a contact cleaner, then wipe with a soft dry cloth.

Cleaning will prevent spots from burning onto the surface. Do not use aggressive chemical cleaners, because they can damage the sticker.

! **WARNING: make sure all the bolts are sufficiently tightened. In case the exhaust system touches the cowling or other parts repeat the adjustment of the exhaust system or contact your authorized dealer.**

! **WARNING: check vehicle manufacturer manual for tightening torques (for dismounted stock parts)!**

! **IT IS NORMAL IF WHITE SMOKE COMES OUT OF THE MUFFLER ON FIRST OPERATION.**

! **DO NOT STAND BEHIND THE MUFFLER ON FIRST OPERATION.**

! **DO NOT USE AUTOMOTIVE WHEEL CLEANERS OR ANY CLEANING PRODUCTS WHICH CONTAIN ACIDIC ADDITIVES TO CLEAN AKRAPOVIČ EXHAUST SYSTEMS.**

MAINTENANCE OF THE AKRAPOVIČ EXHAUST SYSTEM:

1. Clean the titanium exhaust components with a multi-purpose spray lubricant (WD-40 or equivalent), carbon fiber exhaust components with soft and dry cloth and stainless steel components with soft cloth sprayed with contact cleaner, then wipe with soft and dry cloth. A change in the color of the exhaust system is normal due to the high temperatures.
2. Periodically make sure all the bolts and springs are sufficiently tight.

Yamaha FZ8, FAZER / Slip-ON system / STREET LEGAL / Model Year: 2010

Product code: S-Y8SO1-HRC
S-Y8SO1-HRT

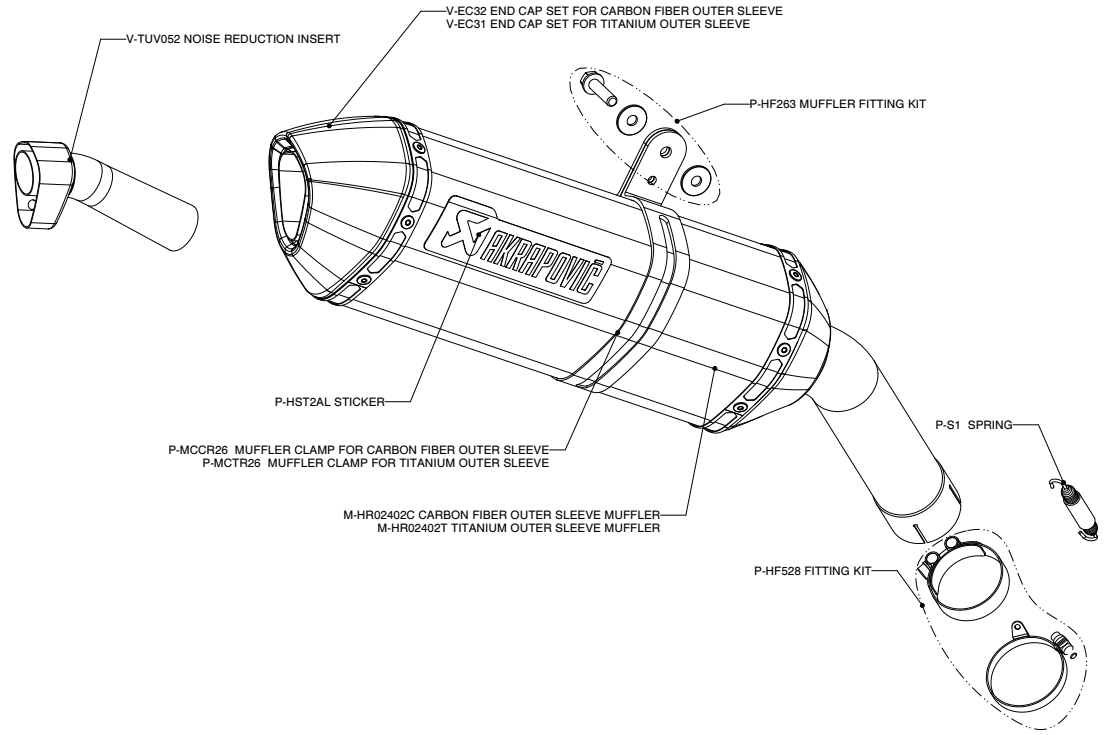

Yamaha FZ8, FAZER /Complete system / RACING LINE with street legal muffler / Model Year: 2010

Product code: S-Y8R2-RC
S-Y8R2-RT
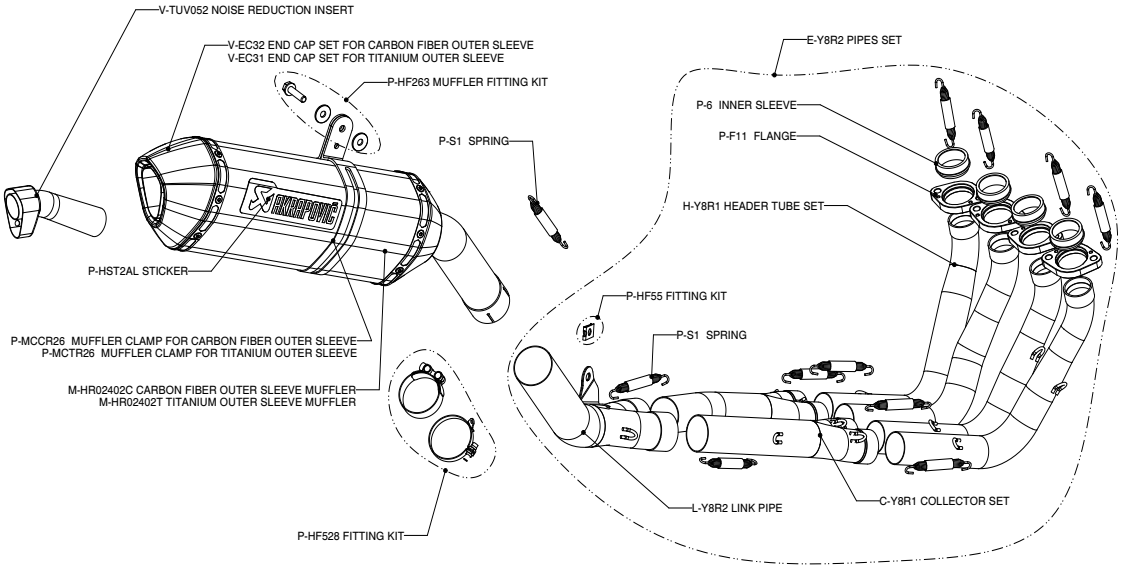
WARNING! IN CASE OF COMBINATION WITH FULL SYSTEM TUBE SET, THE SLIP-ON HOMOLOGATION IS NOT VALID!